Multithreading, Multicasting, Multichallenging - GIS-SCADA Interface Project Implementation

Ranjit Menon & Tom Taber

Telvent Miner & Miner

October 10, 2006

Reliance Energy Limited (REL)

Reliance Energy
Anil Dhirubhai Ambani Group

- India's foremost private sector electric utility company, incorporated in 1929
- Revenue: $2.1 billion
- Total assets: $2.4 billion
- 914 MW of power
- 25 million customers
- Across 4 regions spanning 128,000 sq kms (50,000 sq miles)
- And expanding…

A Tale of Two Cities

- Integrating two utilities – 1000 miles apart and very different visions for the interface
  - Delhi –
    - In the North
    - the Capital
    - more bureaucratic
  - Mumbai –
    - in the West
    - the commercial capital
    - more business-like.

The Two Cities

The Technical Challenge

- Differences such as…
  - Delhi named their switch panels with a nomenclature from left to right, Mumbai had no such system.
  - Mumbai monitored battery sets in substations, Delhi didn't care for batteries
  - SCADA in Delhi was done first, Mumbai followed later.
- The two SCADA systems needed to integrate with a single enterprise GIS

The Technical Challenge

- Single Enterprise GIS database located in IT center in Mumbai.
- Communication between GIS and the two SCADA servers had to pass through:
  - Different WANs, LANs, Firewalls, network switches.
  - Different software – Windows XP and Windows 2000
  - And Different network administrators!

The System Architecture

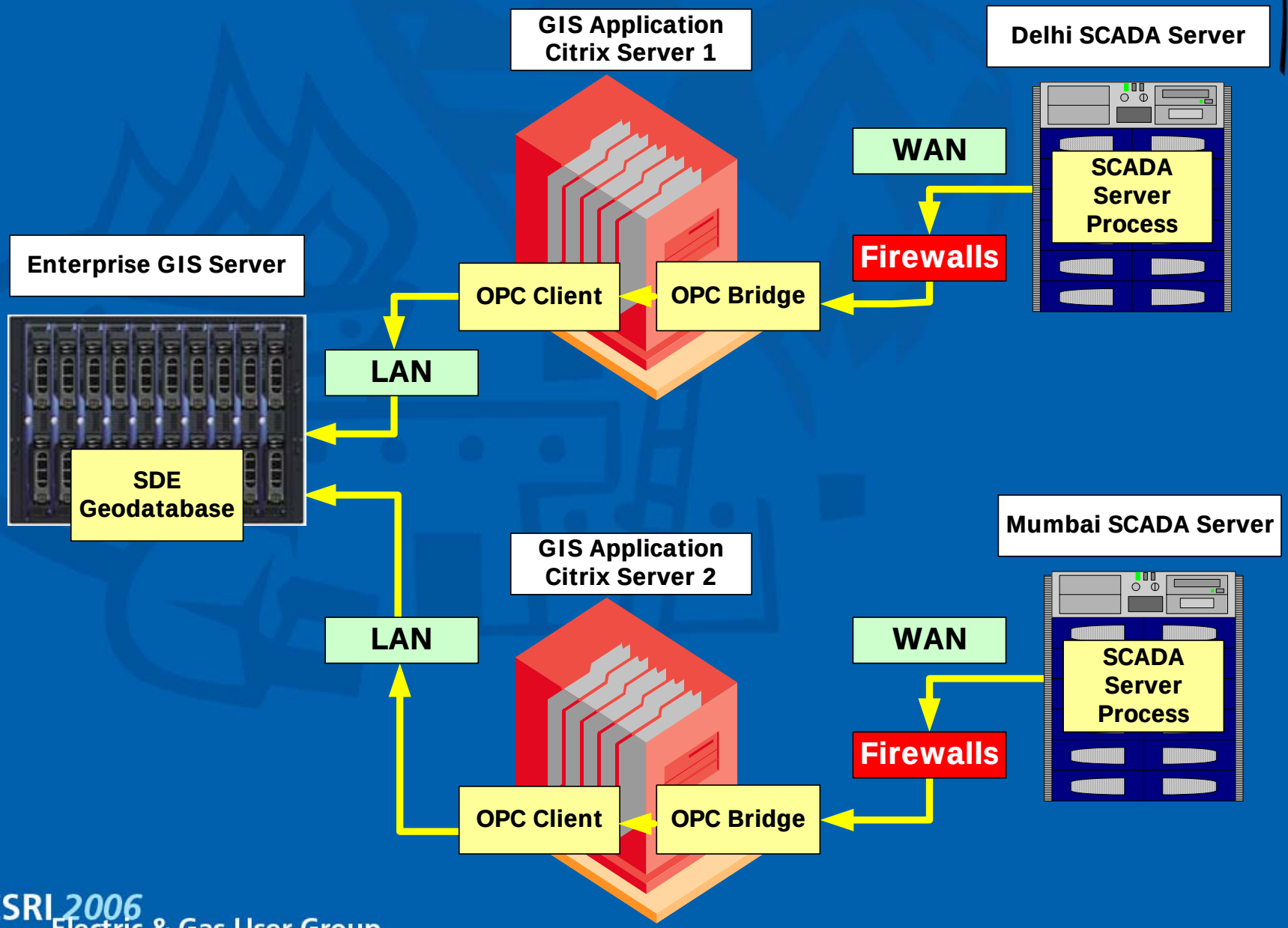

It all starts with SCADA

- An event or condition is detected
- The SCADA system creates a formatted message
- This message is passed from the UNIX SCADA server across the WAN to the Citrix Server

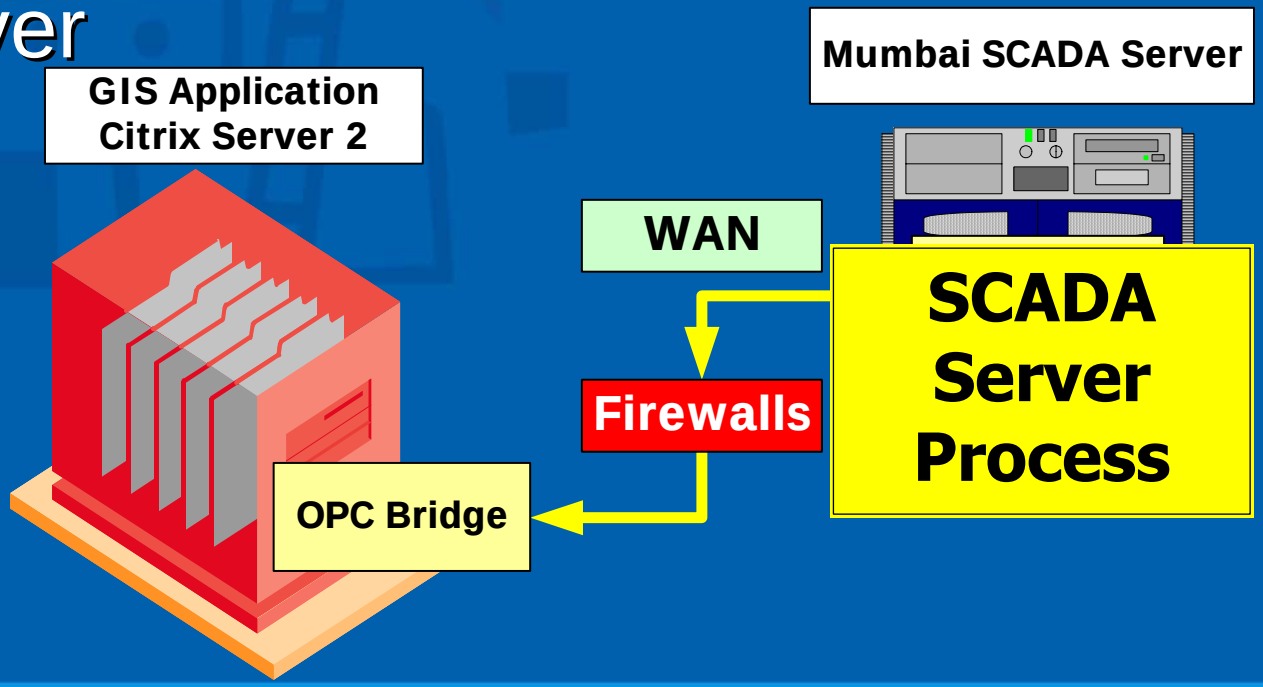

The OPC Bridge

- The OLE for Process Control (OPC) bridge
- Link between UNIX SCADA server and Windows Client
- Exposes OPC Compliant API
- It processes and queues the messages for delivery to another system.

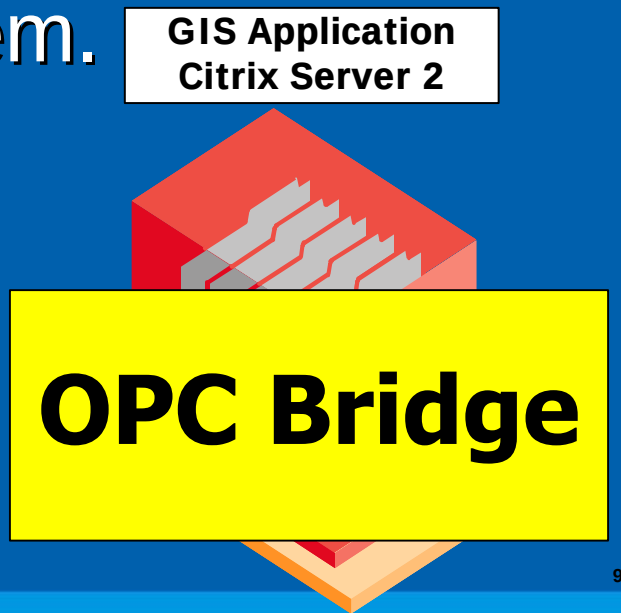

The OPC Client

- A Windows service that always listens for messages from the OPC Bridge
- Asynchronously processes messages
- Messages are recorded to unversioned Oracle tables

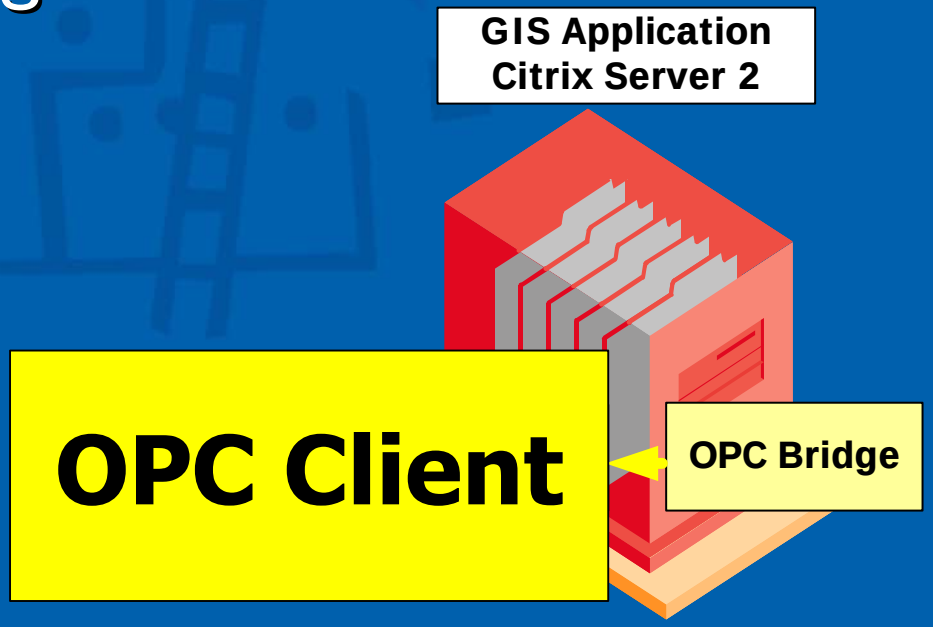

SCADA Database Tables

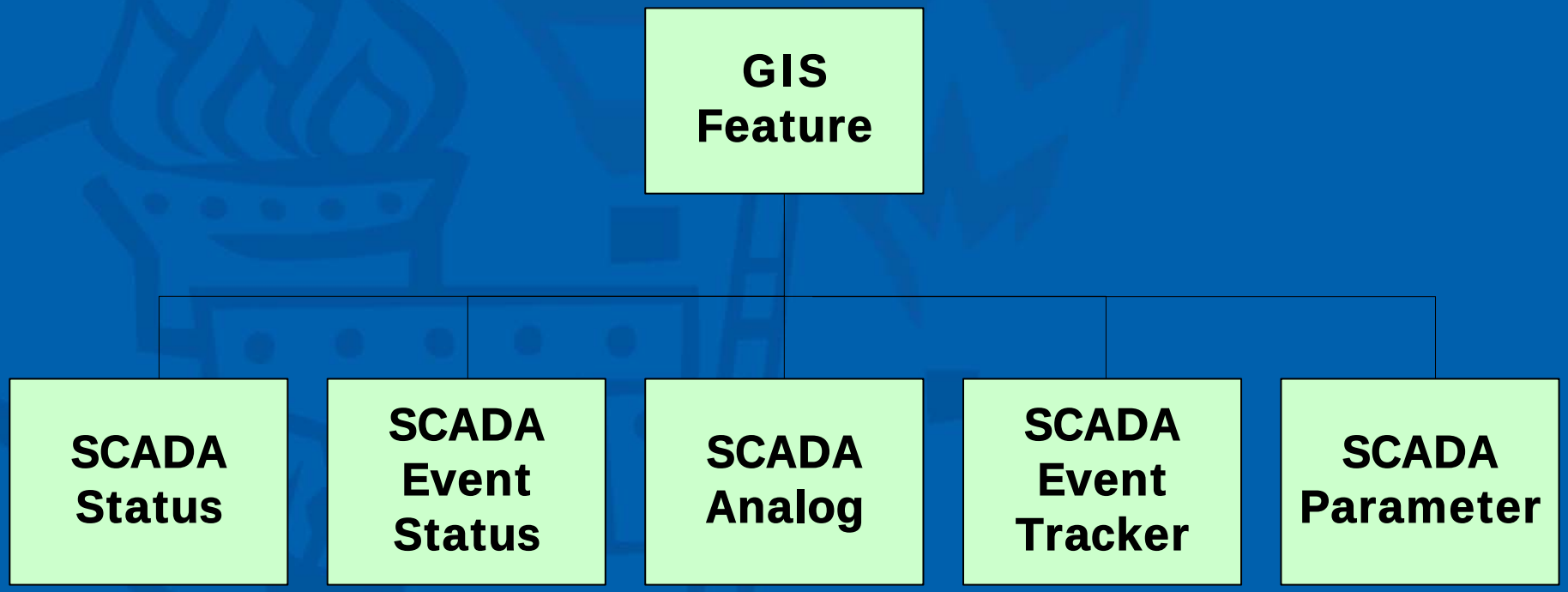

SCADA Database Tables in SDE

- Tables are constantly updated by the OPC Client
- Unversioned SCADA tables are joined to ArcMap Layers through SCADA_ID
- Features are symbolized based on their Analog or Status values
  - Analog = Percent Change
  - Status = Open or Closed

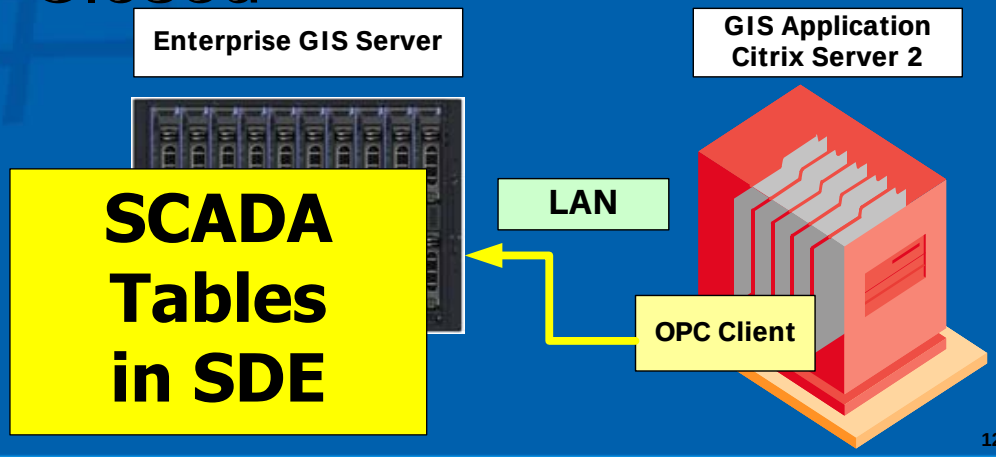

The OPC Client

- OPC Client "subscribes" to the OPC Bridge for Analog & Status changes
  - Analog – A value such as Current or Voltage exceeds a configured threshold
  - Status – Open or Close value changes

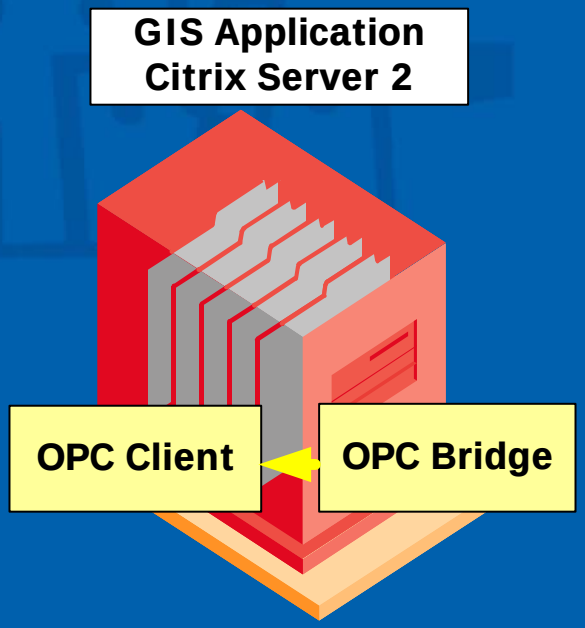

The SCADA Toolbar

- SCADA On/Off
  - Starts and stops the OPC Client
- Event Viewer
  - Contains the current SCADA events

SCADA Event Viewer

SCADA Event/Details Viewer

BayNumber	FeatureClassNam	Parameter	Value	Quality	TimeStamp
ALAK 11 NIL GIRI S.ST	CircuitBreaker	AUTO TRIP	AutoTrip Reset	good	9/25/2006 1:43:21 PM
ALAK 11 LOCAL TRF	CircuitBreaker	AUTO TRIP	AutoTrip Reset	good	9/25/2006 1:44:28 PM
ALAK 11 S-BLK GK-2	CircuitBreaker	AUTO TRIP	AutoTrip Reset	good	9/25/2006 1:44:38 PM
ALAK 11 MANDAKINI S.S	CircuitBreaker	AUTO TRIP	AutoTrip Reset	good	9/25/2006 1:44:46 PM
ALAK 11 DESH BANDU AP	CircuitBreaker	AUTO TRIP	AutoTrip Reset	good	9/25/2006 1:45:02 PM
ALAK 11 NRI S/T	CircuitBreaker	AUTO TRIP	AutoTrip Reset	good	9/25/2006 1:45:09 PM
VSNL 11 CAP BANK1	CircuitBreaker	AUTO TRIP	AutoTrip Reset	good	9/25/2006 1:40:28 PM
VSNL 11 7M.MOTH PH-1	CircuitBreaker	AUTO TRIP	AutoTrip Reset	good	9/25/2006 1:41:02 PM
VSNL 11 LV1	CircuitBreaker	AUTO TRIP	AutoTrip Reset	good	9/25/2006 1:41:11 PM
VSNL 11 9R-BLK GK1	CircuitBreaker	AUTO TRIP	AutoTrip Reset	good	9/25/2006 1:40:57 PM
VSNL 11 10NEHRU APPT	CircuitBreaker	AUTO TRIP	AutoTrip Reset	good	9/25/2006 1:40:48 PM
VSNL 11 BUS COUPLER	CircuitBreaker	AUTO TRIP	AutoTrip Reset	good	9/25/2006 1:42:53 PM

Clear Viewer Auto Refresh ArcMap

Status

Analog

SCADA Event/Details Viewer

BayNumber	FeatureClassNam	Parameter	Value	Quality	TimeStamp
VSNL 11 7M.MOTH PH-1	CircuitBreaker	B_PH CURRENT	70.76	good	9/25/2006 1:46:20 PM
VSNL 11 LV2	CircuitBreaker	B_PH CURRENT	390.71	good	9/25/2006 1:46:19 PM
VSNL 11 8EPR CLNY	CircuitBreaker	B_PH CURRENT	79.71	good	9/25/2006 1:46:21 PM
VSNL 11 2G-BLK M.MOTH	CircuitBreaker	B_PH CURRENT	72.51	good	9/25/2006 1:46:21 PM
VSNL 11 4F-BLK GK1	CircuitBreaker	B_PH CURRENT	81.67	good	9/25/2006 1:46:20 PM
ALAK 33 OKHLA FDR-1	CircuitBreaker	B_PH CURRENT	0	good	9/25/2006 1:43:34 PM
VSNL 11 2G-BLK M.MOTH	CircuitBreaker	B_PH CURRENT	72.51	good	9/25/2006 1:46:21 PM
ALAK 33 OKHLA FDR-1	CircuitBreaker	Y_PH CURRENT	0	good	9/25/2006 1:39:40 PM
ALAK 33 M.MOTH T OFF	CircuitBreaker	Y_PH CURRENT	0	good	9/25/2006 1:39:37 PM
ALAK 33 OKHLA FDR-2	CircuitBreaker	Y_PH CURRENT	197.14	good	9/25/2006 1:46:22 PM
ALAK 33 HV1	CircuitBreaker	Y_PH CURRENT	81.71	good	9/25/2006 1:46:26 PM
ALAK 33 HV2	CircuitBreaker	Y_PH CURRENT	125.84	good	9/25/2006 1:46:26 PM

Clear Viewer Auto Refresh ArcMap

SCADA Event Viewer

BayNumber	FeatureClassNam	Parameter	Value	Quality	TimeStamp
ALAK 11 NIL GIRI S.ST	CircuitBreaker	AUTO TRIP	AutoTrip Reset	good	9/25/2006 1:43:21 PM
ALAK 11 LOCAL TRF	CircuitBreaker	AUTO TRIP	AutoTrip Reset	good	9/25/2006 1:44:28 PM
ALAK 11 S-BLK GK-2	CircuitBreaker	AUTO TRIP	AutoTrip Reset	good	9/25/2006 1:44:38 PM
ALAK 11 MANDAKINI S.S	CircuitBreaker	AUTO TRIP	AutoTrip Reset	good	9/25/2006 1:44:46 PM
ALAK 11 DESH BANDU AP	CircuitBreaker	AUTO TRIP	AutoTrip Reset	good	9/25/2006 1:45:02 PM
ALAK 11 NRI S/T	CircuitBreaker	AUTO TRIP	AutoTrip Reset	good	9/25/2006 1:45:09 PM
VSNL 11 CAP BANK1	CircuitBreaker	AUTO TRIP	AutoTrip Reset	good	9/25/2006 1:40:28 PM
VSNL 11 7M.MOTH PH-1	CircuitBreaker	AUTO TRIP	AutoTrip Reset	good	9/25/2006 1:41:02 PM
VSNL 11 LV1	CircuitBreaker	AUTO TRIP	AutoTrip Reset	good	9/25/2006 1:41:11 PM
VSNL 11 9R-BLK GK1	CircuitBreaker	AUTO TRIP	AutoTrip Reset	good	9/25/2006 1:40:57 PM
VSNL 11 10NEHRU APPT	CircuitBreaker	AUTO TRIP	AutoTrip Reset	good	9/25/2006 1:40:48 PM
VSNL 11 BUS COUPLER	CircuitBreaker	AUTO TRIP	AutoTrip Reset	good	9/25/2006 1:42:53 PM

Clear Viewer Auto Refresh ArcMap

Status

BayNumber	FeatureClassNam	Parameter	Value	Quality	TimeStamp
VSNL TR1	PowerTransformer	TAP POS	5	good	9/25/2006 1:45:47 PM
VSNL TR2	PowerTransformer	TAP POS	5	good	9/25/2006 1:45:56 PM
ALAK TR1	PowerTransformer	TAP POS	11	good	9/25/2006 1:45:37 PM
ALAK TR2	PowerTransformer	TAP POS	11	good	9/25/2006 1:45:41 PM
BATR TR1	PowerTransformer	TAP POS	5	good	9/25/2006 12:53:39 PM
BATR TR2	PowerTransformer	TAP POS	5	good	9/25/2006 1:38:37 PM
VSNL TR1	PowerTransformer	OLTC	OLTC Supply Fail	good	9/25/2006 1:45:48 PM
VSNL TR2	PowerTransformer	OLTC	OLTC Supply Fail	good	9/25/2006 1:45:56 PM
ALAK TR1	PowerTransformer	OLTC	OLTC Supply Fail	good	9/25/2006 1:45:37 PM
ALAK TR2	PowerTransformer	OLTC	OLTC Supply Fail	good	9/25/2006 1:45:41 PM
BATR TR1	PowerTransformer	OLTC	OLTC Supply Fail	good	9/25/2006 1:46:06 PM
BATR TR2	PowerTransformer	OLTC	OLTC Supply Fail	good	9/25/2006 1:46:01 PM

Clear Viewer Auto Refresh ArcMap

Analog

SCADA Event Viewer

SCADA Event/Details Viewer

BayNumber	FeatureClassNam	Parameter	Value	Quality	TimeStamp
ALAK	BatteryCharger	DC SYSTEM EARTH	Charger DC Earth	good	9/25/2006 1:38:43 PM
ALAK 11 NIL GIRI S.ST	CircuitBreaker	SA610 B_F_DIST	0	badOutOfService	9/25/2006 1:43:27 PM
ALAK 11 DDA JANTA FLA	CircuitBreaker	SA610 B_F_DIST	200	good:2	9/25/2006 1:43:47 PM
ALAK 33 OKHLA FDR-1	CircuitBreaker	SA610 B_F_DIST	1000	good:2	9/25/2006 1:43:56 PM
ALAK 33 HV1	CircuitBreaker	SA610 Y_F_DIST	0	badOutOfService	9/25/2006 1:43:28 PM
ALAK 33 HV2	CircuitBreaker	SA610 Y_F_DIST	0	badOutOfService	9/25/2006 1:43:48 PM
ALAK 11 EPDP-2	CircuitBreaker	SA610 Y_F_DIST	0	badOutOfService	9/25/2006 1:43:57 PM

Distance To Fault

SCADA Event/Details Viewer

BayNumber	FeatureClassNam	Parameter	V
ALAK	BatteryCharger	DC SYSTEM EARTH	C
ALAK 11 NIL GIRI S.ST	CircuitBreaker	SA610 B_F_DIST	0
ALAK 11 DDA JANTA FLA	CircuitBreaker	SA610 B_F_DIST	2
DP-2	CircuitBreaker	SA610 B_F_DIST	1
GIRI S.ST	CircuitBreaker	SA610 Y_F_DIST	0
A JANTA FLA	CircuitBreaker	SA610 Y_F_DIST	0
ALAK 11 EPDP-2	CircuitBreaker	SA610 Y_F_DIST	0

Zoom
Highlight

Zoom To / Highlight

SCADA Event Viewer

SCADA Event/Details Viewer

BayNumber	FeatureClassNam	Parameter	V
ALAK	BatteryCharger	DC SYSTEM EARTH	C
ALAK 11 NIL GIRI S.ST	CircuitBreaker	SA610 B_F_DIST	0
ALAK 11 DDA JANTA FLA	CircuitBreaker	SA610 B_F_DIST	2
DP-2	CircuitBreaker	SA610 B_F_DIST	1
GIRI S.ST	CircuitBreaker	SA610 Y_F_DIST	0
A JANTA FLA	CircuitBreaker	SA610 Y_F_DIST	0
ALAK 11 EPDP-2	CircuitBreaker	SA610 Y_F_DIST	0

Zoom
Highlight

Zoom To / Highlight

Fault display

- A message would be received from SCADA with the distance a fault might have occurred from a specific device such as a circuit breaker
- Service would pass on the message to the Viewer
  - Used Multicasting
- Viewer performs a trace from the device up to the specific distance and place a flag
- All affected conductors and devices would also be highlighted graphically

SCADA Fault Display

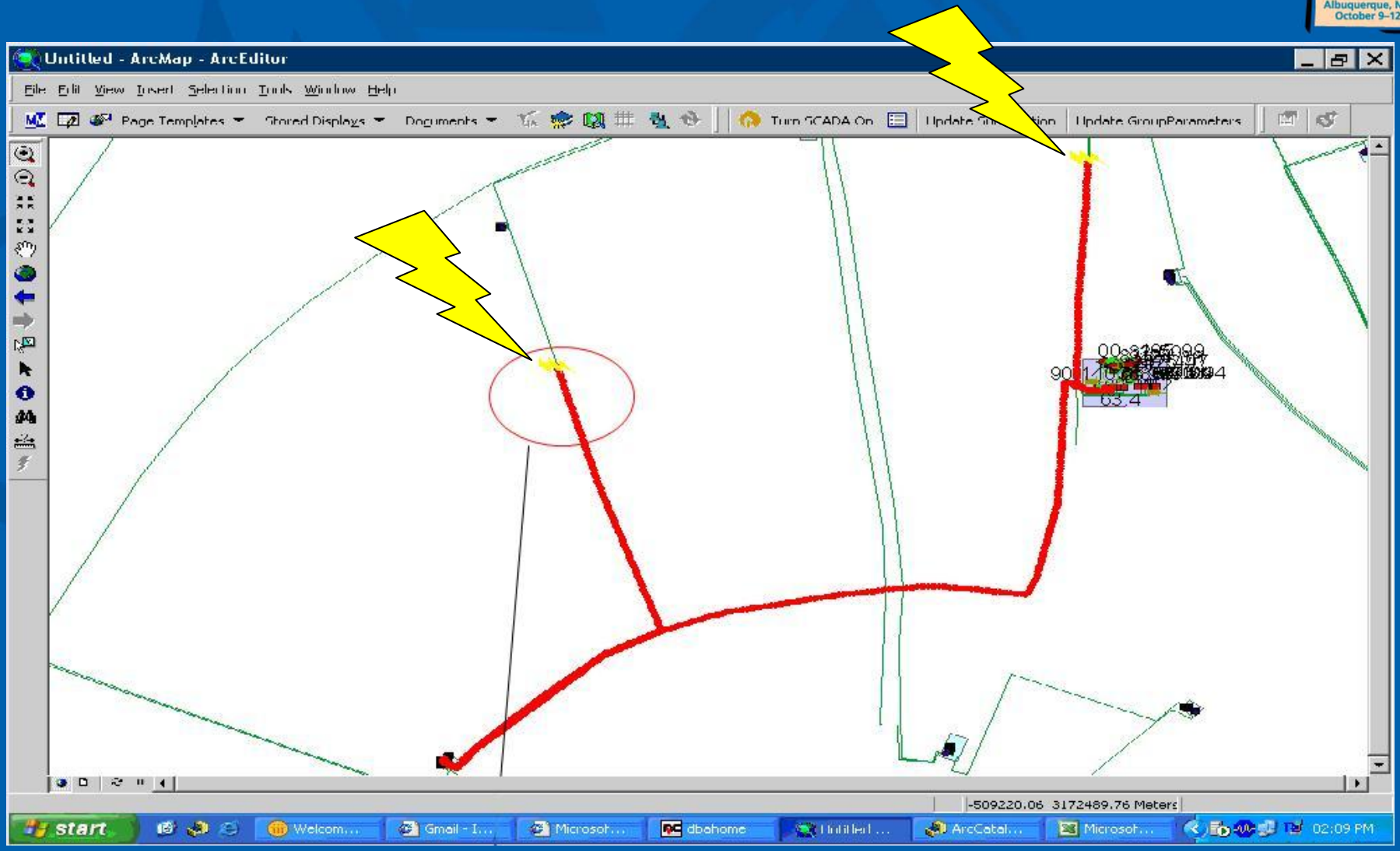

Severe Outage Performance

- Too many messages could be received due to an outage
  - Windows service was multi-threaded to handle multiple messages in quick sequence
  - Each message would get its dedicated thread that would update the non-versioned tables
  - Symbology would change accordingly

You've Got Mail!

- Send an email if
  - A certain device tripped more than a threshold number of times
  - Current/voltage value exceeded the threshold
  - Fault occurred
- Email list was separate for the two cities
- Email message was different
- Email criteria (threshold) was different

Manage Your Subscription

- GIS user/admin might want to change the subscription
  - Subscribe to new analog/status values
  - New devices/electrical assets were added to the network that must be monitored
  - Priority changed
    - Monitor certain devices or analog/status values more or less frequently

Technical Network Difficulties

- Several problems with NAT – Network Address Translation
- IP address of client not recognized by server because of network switches
- Port would not be open or would close automatically
- Difference in subnet masks caused IP addresses to be ignored by server

Results of the Implementation

- The integrated approach of passing messages between systems using services was robust and successful
- The GIS provided an ideal platform for displaying SCADA events
- Technical issues were resolved quickly

Reliance SCADA-GIS Integration

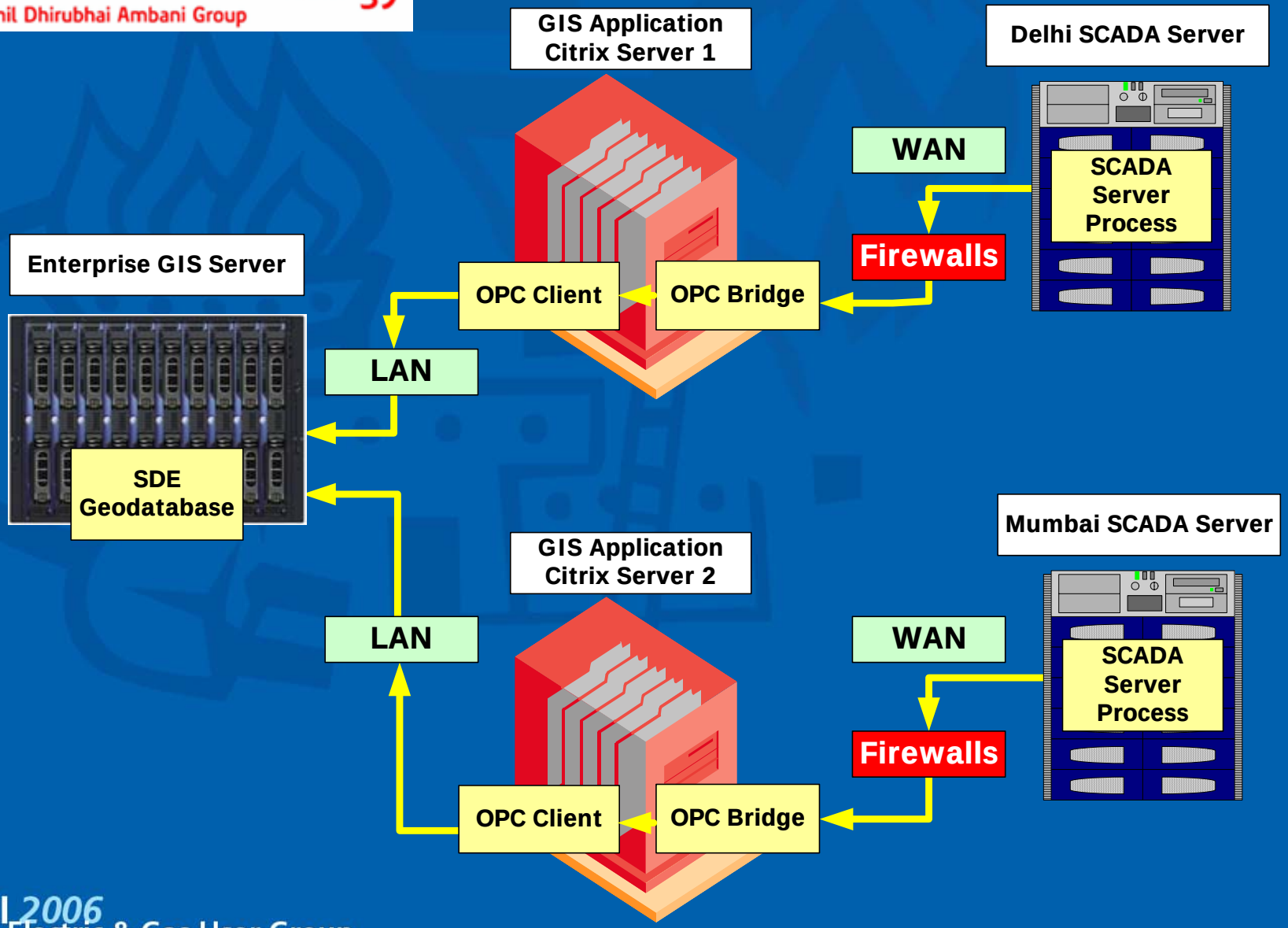

Questions?

Tom Taber – Director of Implementation Services
Ranjit Menon – Programmer Analyst

Telvent Miner & Miner